Length

Outcomes

A student:

- develops understanding and fluency in mathematics through exploring and connecting mathematical concepts, choosing and applying mathematical techniques to solve problems, and communicating their thinking and reasoning coherently and clearly **MAO-WM-01**
- applies knowledge of the perimeter of plane shapes and the circumference of circles to solve problems **MA4-LEN-C-01**

Related Life Skills outcomes: MALS-LEN-01

Content

Solve problems involving the perimeter of various quadrilaterals and simple composite figures

- Solve problems involving the perimeter of plane shapes, including parallelograms, trapeziums, rhombuses and kites

Example(s):

Finding the perimeter of irregular plane shapes such as:

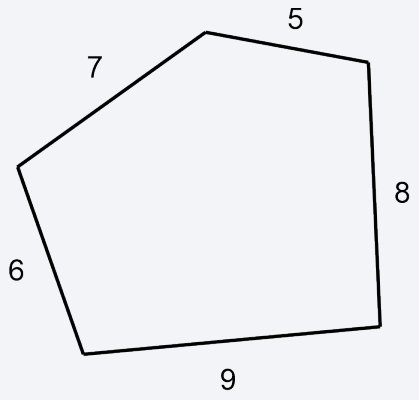

UuM7, UGP6

- Solve problems relating to the perimeter of simple composite figures
UuM7, **UGP6**

- Compare methods of solution for finding perimeter and evaluate the efficiency of those methods

Example(s):

Analysing different ways a perimeter could be found.

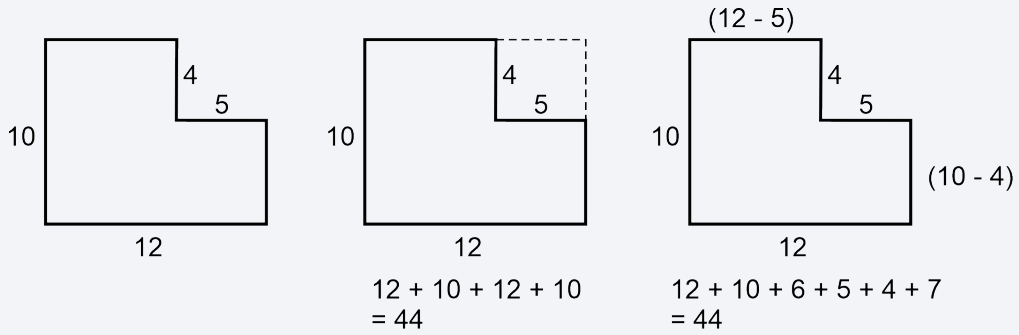

Image long description: The composite shape is a rectangle with a section missing. The intact height of the shape is labelled 10 and the width is labelled 12. The missing section height is 4 and the width 5. The first way to find the perimeter is to extend the missing section's height and width to create the equation: 12 plus 10, plus 12, plus 10 equals 44. The second way to find the perimeter is to subtract the missing section's height and width from the rectangle's height and width to find the length of the shortened sides, and add this to the height and width of the rectangle and missing sections. This forms the equation: 12 plus 10, plus 6, plus 5, plus 4, plus 7 equals 44.

Describe the relationships between the features of circles

- Identify and describe the relationship between circle features, including the radius, diameter, arc, chord, sector and segment of a circle, and a tangent to a circle
- Define π as the ratio of the circumference to the diameter of any circle

Example(s):

Comparing values for the ratio of the circumference to the diameter by measuring the diameter and circumference of a variety of circles and/or cylinders.

UuM9

- Verify that the number π is a constant and develop the formula for the circumference of a circle
UuM9
- Apply the formula for the circumference of a circle in terms of the diameter d or radius r (circumference of a circle $= \pi d$ or $2\pi r$) to solve related problems to solve related problems

Example(s):

Calculating the inner circumference of several yidakis (didgeridoos) and examining how the inner circumference affects the sound produced.

UuM9, NPA8, UGP6

- Establish the arc length formula $\left(l = \frac{\theta}{360} \times 2\pi r\right)$ where l is the arc length and θ is the angle subtended at the centre by the arc
UuM9, **NPA8**, **UGP6**

- Solve problems by finding arc lengths and the perimeter of sectors, giving an exact answer in terms of π or an approximate answer

  Example(s):

  Calculating the approximate distance between 2 locations on the equator using an assumed value for the Earth's radius.

  UuM9, NPA8, UGP6
- Find the perimeter of quadrants, semicircles and simple composite figures consisting of 2 shapes in a variety of contexts, including using digital tools

  Example(s):

  Using online mapping applications to calculate the perimeter of places of interest, such as a local running track or botanical garden.

  UuM9, NPA8, UGP6

Right-angled triangles (Pythagoras' theorem)

Outcomes

A student:

- develops understanding and fluency in mathematics through exploring and connecting mathematical concepts, choosing and applying mathematical techniques to solve problems, and communicating their thinking and reasoning coherently and clearly **MAO-WM-01**
- applies Pythagoras' theorem to solve problems in various contexts **MA4-PYT-C-01**

Content

Identify and define Pythagoras' theorem

- Identify and describe the hypotenuse as the side opposite the right angle and the longest side in any right-angled triangle

Example(s):

Analysing right-angled triangles of differing sizes and orientations and identifying the hypotenuse.

UGP6

- Establish the relationship between the lengths of the sides of a right-angled triangle

Example(s):

Rearranging 4 congruent right-angled triangles of side lengths *a*, *b* and *c* to form a square with a side length $a + b$ and establishing the relationship between the lengths of the sides of a right-angled triangle.

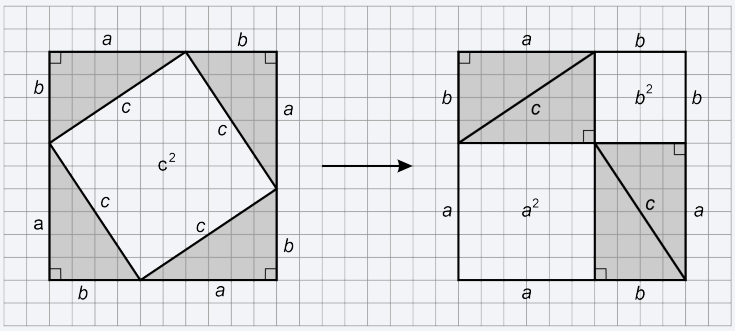

$a^2 + b^2 = c^2$

Image long description: The first square has a side length of a plus b, and has a square of side length c at a diagonal rotation inside it. The second square represents how this creates a square of side length a plus b, with 2 identical rectangles of diagonal length c and squares of side length a and side length b inside the larger square.

UGP6, NPA6

- Use the relationship to record and define Pythagoras' theorem both algebraically and in words **UGP6**, **NPA8**

Examine problems involving Pythagoras' theorem

- Apply Pythagoras' theorem to find the unknown length of a side in a right-angled triangle, giving answers in an exact form or as decimal approximations

  Example(s):

  Reasoning why the negative solution of the relevant quadratic equation is not feasible when solving problems involving Pythagoras' theorem.

  NPA8, UuM10, UGP7
- Apply the converse of Pythagoras' theorem to establish whether a triangle is right angled

  Example(s):

  Justifying that a triangle with side lengths of 5 m, 12 m and 13 m is right-angled.

  UGP6
- Solve practical problems involving Pythagoras' theorem before exploring a variety of related problems

  Example(s):

  Exploring the possible areas of a rhombus with a side length of 8 cm and one diagonal length of 15 cm.

  NPA8, UuM10, UGP7
- Justify whether a set of 3 integers is a Pythagorean triad
  UGP7

Area

Outcomes

A student:

- develops understanding and fluency in mathematics through exploring and connecting mathematical concepts, choosing and applying mathematical techniques to solve problems, and communicating their thinking and reasoning coherently and clearly **MAO-WM-01**
- applies knowledge of area and composite area involving triangles, quadrilaterals and circles to solve problems **MA4-ARE-C-01**

Related Life Skills outcomes: MALS-ARE-01

Content

Develop and use formulas to find the area of rectangles, triangles and parallelograms to solve problems

- Apply the formula to find the area of a rectangle or square: $A = lb$, where l is the length and b is the breadth (or width) of the rectangle or square

Example(s):

Comparing various rectangles with the same area and examining whether they have the same perimeter, such as finding the possible perimeters of all rectangles with integer side lengths that have an area of 36 cm^2.

UuM8, NPA8

- Develop and apply the formula to find the area of a triangle: $A = \frac{1}{2}bh$, where b is the base length and h is the perpendicular height

Example(s):

Verifying the formula for the area of a triangle by folding a rectangle in half to see that the area of the triangle is half that of the rectangle.

Identifying the perpendicular height of triangles in different orientations and verifying that triangles with the same base length and height have equal areas by using digital tools.

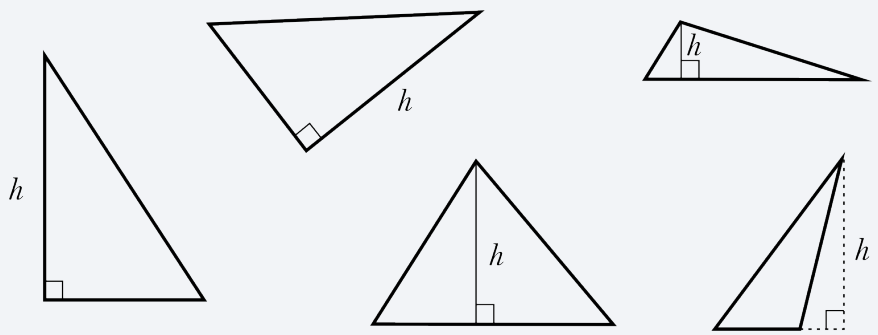

UuM8

- Develop and apply the formula to find the area of a parallelogram: $A = bh$ where b is the base length and h is the perpendicular height

Example(s):

Developing the formula for the area of a parallelogram by either rotating a right-angled triangle or bisecting a pair of opposite sides of a parallelogram and rotating the triangles to form a rectangle.

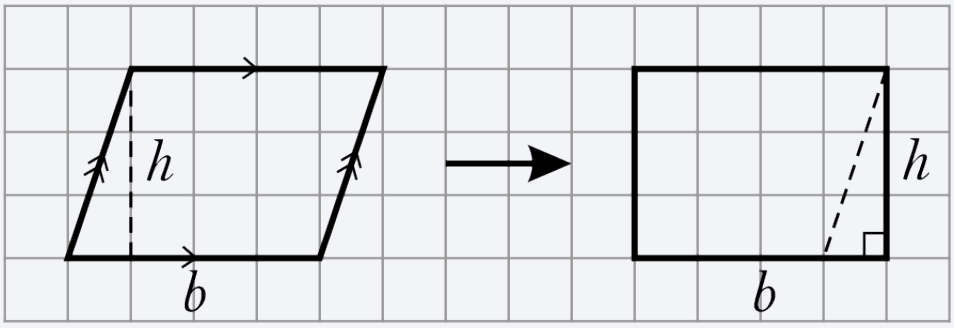

Image long description: A parallelogram showing perpendicular height h and side length b, transformed into a rectangle by using the perpendicular height as the width of the rectangle, and the length of the parallelogram as the length of the rectangle.

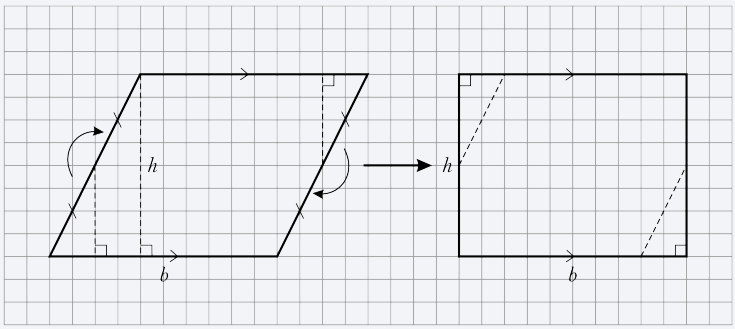

Image long description: A parallelogram transformed into a rectangle, demonstrating how a triangle on the edge of the parallelogram can be flipped to form a rectangle of the same dimensions.

UuM9, NPA8

- Calculate the area of composite figures that can be dissected into rectangles, squares, parallelograms or triangles to solve problems

Example(s):

Exploring different ways to find composite areas.

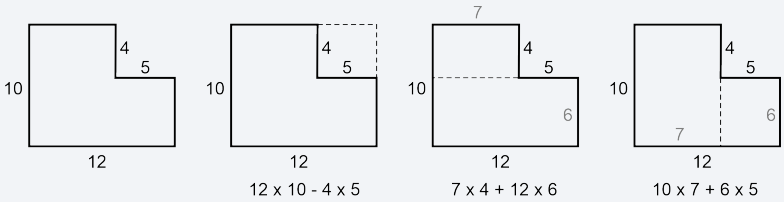

Image long description: The first diagram shows that the composite shape is 2 rectangles. The large rectangle has a width of 6 and length of 12, the other has a width of 4 and length of 7. They are joined together so the shape is a rectangle with a corner missing. The second diagram shows that the area can be found by first finding the total area of the shape and subtracting the missing section with the equation: 12 multiplied by 10, minus 4 multiplied by 5. The third diagram shows that the area can be found by adding the total areas of the 2 rectangles when split horizontally. The equation is 7 multiplied by 4, plus 12 multiplied by 6. The fourth diagram shows that the area can be found by adding the total areas of the 2 rectangles when split vertically. The equation is 10 multiplied by 7, plus 6 multiplied by 5.

UuM10

Develop and use the formula to find the area of circles and sectors to solve problems

- Develop and apply the formula to find the area of a circle: $A = \pi r^2$, where r is the length of the radius

Example(s):

Developing the formula to find the area of a circle by dissecting a circle into many congruent sectors and arranging them to form an approximate parallelogram with height *r* and base πr and considering the area of the parallelogram.

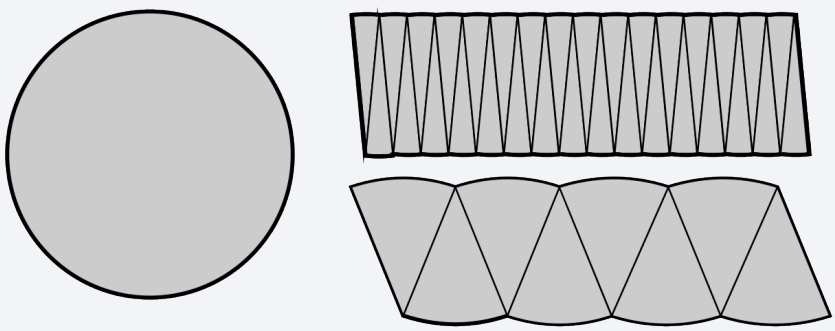

Image long description: A circle is broken up into 8 sectors which are placed together to create the third shape. The second shape is created using 32 sectors of the same circle arranged in a tight line to indicate how the smaller the size of the sectors, the closer the shape becomes to a parallelogram.

UuM9, NPA8

- Explain how the area of a sector can be developed from the area of a circle $\left(A = \frac{\theta}{360} \times \pi r^2\right)$
  UuM9, **NPA8**
- Find the area of quadrants, semicircles and sectors, and apply these formulas in the context of real-life problems

  Example(s):

  Measuring and calculating the area inside the 3-point line of a basketball court.

  UuM9, NPA8, UGP6
- Calculate the areas of composite shapes involving quadrants, semicircles and sectors to solve problems
  UuM9, **NPA8**, **UGP6**

Develop and use the formulas to find the area of trapeziums, rhombuses and kites to solve problems

- Develop and apply the formula to find the area of a kite or rhombus: $A = \frac{1}{2}xy$, where x and y are the lengths of the diagonals

  Example(s):

  Developing the area of a rhombus or kite by dividing the shape on the diagonals into 2 or 4 right-angled triangles:

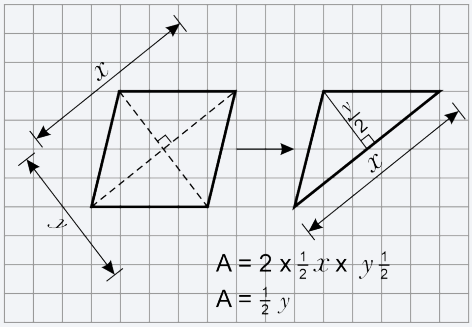

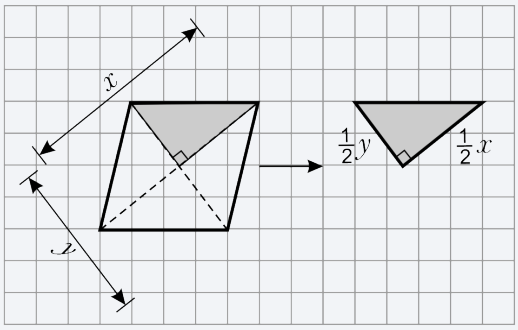

$$A = 4 \times \frac{1}{2} \times \frac{1}{2}x \times \frac{1}{2}y = \frac{1}{2}xy$$

Image long description: Demonstration of how a rhombus with one diagonal measuring x and one diagonal measuring y becomes a triangle with perpendicular height y over 2 and base length x.

UuM9, NPA8

- Develop and apply the formula to find the area of a trapezium: $A = \frac{h}{2}(a + b)$, where h is the perpendicular height and a and b are the lengths of parallel sides

Example(s):

Developing the formula for the area of a trapezium by bisecting the non-parallel sides, dissecting the trapezium and rotating triangles to form a rectangle with the same perpendicular height and length as half of the sum of the 2 parallel sides.

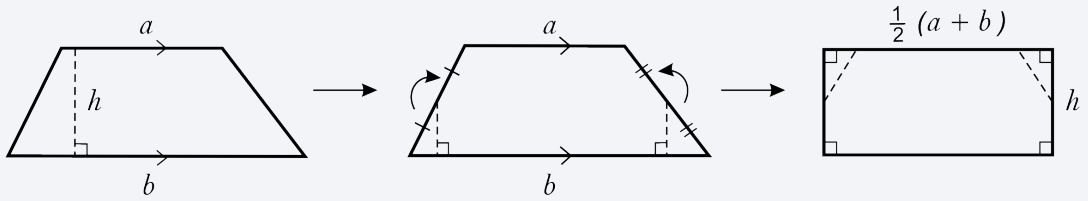

Image long description: Trapezium with parallel sides *a* and *b*, and perpendicular height *h*. Triangles on either end are flipped upwards to form a rectangle with side length of a half multiplied by *a* plus *b*, and width *h*.

UuM9, NPA8

- Calculate the area of composite shapes involving trapeziums, kites and rhombuses to solve problems
  UuM9, **NPA8**, **UGP6**

Choose appropriate units of measurement for area and convert between units

- Choose an appropriate unit to measure the area of different shapes and surfaces, and justify the choice

Example(s):

Examining the suitability of units relative to the size of an object, based on real-life scenarios such as the area of a paddock in hectares, the area of a local botanical garden in km^2 or the floor space of a hall in m^2.

- Convert between metric units of area using *1* cm^2 = *100* mm^2, *1* m^2 = *10 000* cm^2, *1* ha = *10 000* m^2 and *1* km^2 = *1 000 000* m^2 = *100* ha

Example(s):

Representing conversions using areas of squares.

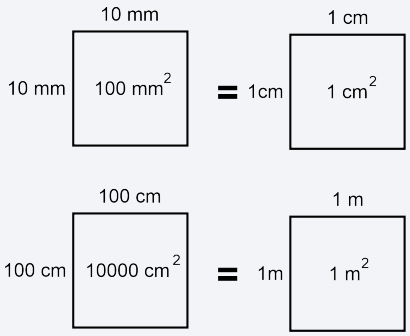

Image long description: The first square has sides of 10 millimetres with an area of 100 square millimetres. It is equal to the second square that has sides of 1 centimetre and an area of 1 square centimetre. The third square has sides of 100 centimetres and an area of 10 000 square centimetres. It is equal to the fourth square with sides of 1 metre and an area of 1 square metre.

UuM8

Volume

Outcomes

A student:

- develops understanding and fluency in mathematics through exploring and connecting mathematical concepts, choosing and applying mathematical techniques to solve problems, and communicating their thinking and reasoning coherently and clearly **MAO-WM-01**
- applies knowledge of volume and capacity to solve problems involving right prisms and cylinders **MA4-VOL-C-01**

Related Life Skills outcomes: MALS-VOL-01

Content

Describe the different views of prisms and solids that have been formed from prism combinations

- Represent prisms from different views in 2 dimensions, including top, side, front and back views
  UGP5
- Describe and illustrate solids formed from prism combinations from different views in 2 dimensions, including top, side, front and back views

  Example(s):

  Illustrating different perspectives of solids consisting of combinations of prisms created using digital tools or concrete materials.

  UGP5
- Identify and illustrate the cross-sections of different prisms
  UGP5
- Examine the idea that prisms have a uniform cross-section that is equal to the base area
  UGP5
- Determine if a particular solid has a uniform cross-section
  UGP5

Develop and apply the formula to find the volume of a prism to solve problems

- Develop the formula for the volume of a prism: $V = base\ area \times height$, leading to $V = Ah$
  UuM9
- Apply the formula for the volume of a prism to prisms with uniform cross-sections to solve problems

  Example(s):

  Calculating the side length of a cube with a volume of 125 cm^3.

  UuM9, NPA8, UGP6

Develop the formula for finding the volume of a cylinder and apply the formula to solve problems

- Develop and apply the formula to solve problems involving the volume of cylinders: $V = \pi r^2 h$, where r is the length of the radius of the base and h is the perpendicular height

Example(s):

Developing the formula for finding the volume of a cylinder by recognising repeated layers of circles.

Calculating the volume of wood eaten by termites to create an emu caller (hollow cylinder) assuming they are perfect cylinders.

UuM9, NPA8

Choose appropriate units of measurement for volume and capacity and convert between units

- Recognise that 1000 L is equal to 1 kilolitre (kL) and use the abbreviation
  UuM8
- Recognise that 1000 kL is equal to 1 megalitre (ML) and use the abbreviation

Example(s):

Recognising the use of kL and ML in estimating the volume of real-life situations such as Sydney Harbour, a local dam or a backyard swimming pool.

UuM8

- Choose an appropriate unit to measure the volume or capacity of different objects and justify the choice

Example(s):

Identifying the most appropriate units to measure the capacity of a swimming pool or a fish tank.

Using the capacities of familiar containers to help estimate the capacity of larger containers.

- Convert between metric units of volume and capacity (1 cm^3 = 1000 mm^3, 1 cm^3 = 1 mL, 1 m^3 = 1000 L = 1 kL, 1000 kL = 1 ML)
  UuM8, **UuM10**
- Solve practical problems involving the volume and capacity of right prisms and cylinders

Example(s):

Given the volume of carrying tools used by Aboriginal Peoples, demonstrate how to estimate their capacity and explore the maximum number of objects they can hold.

Comparing the capacity of a cubic tank with the dimensions *1.5* m × *1.5* m × *1.5* m to a cylindrical tank 1.6 m in diameter and with a height of 1.6 m.

UuM9, NPA8, UGP6